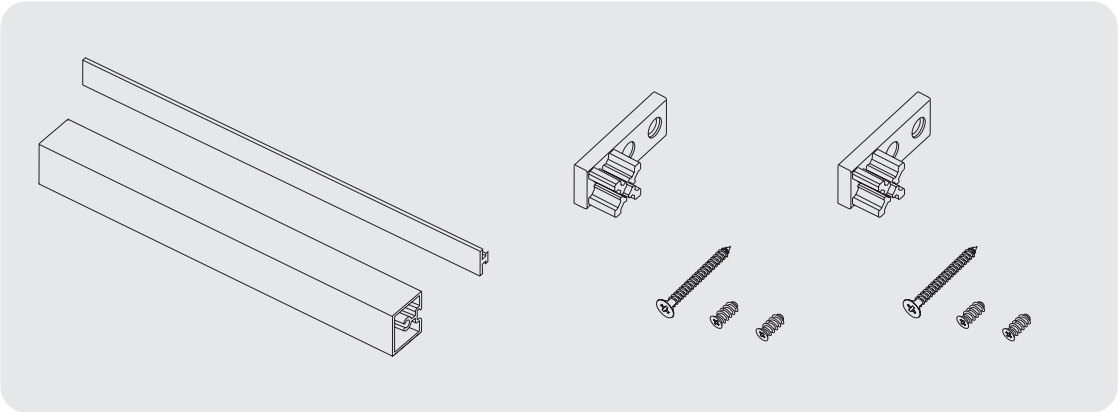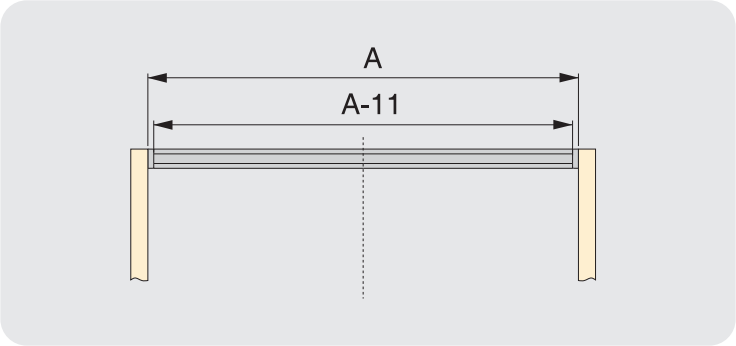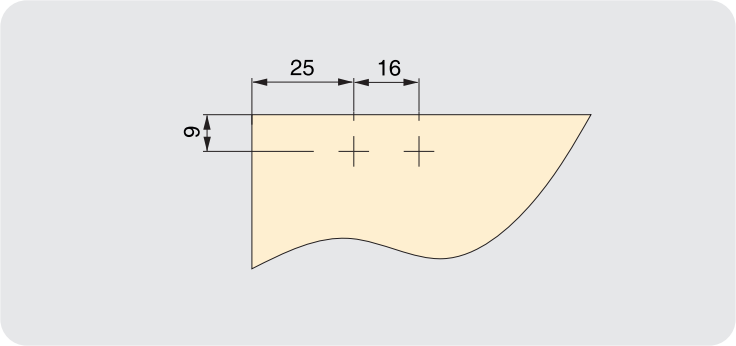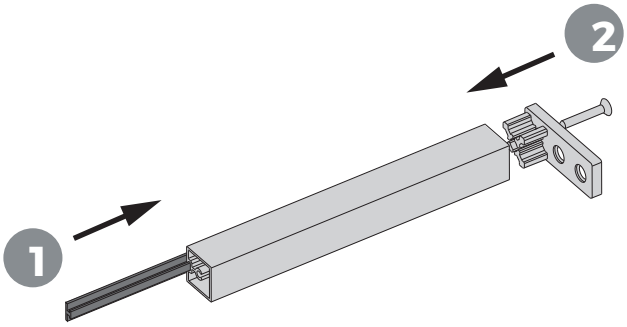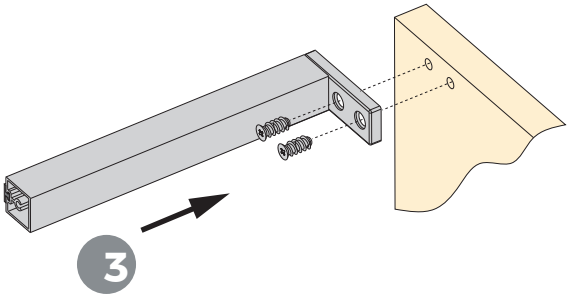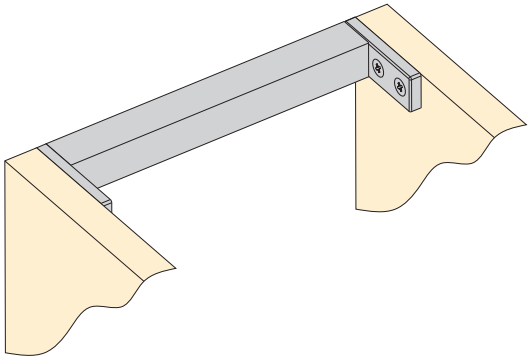KIT ALBEAM