emuca
where creation begins

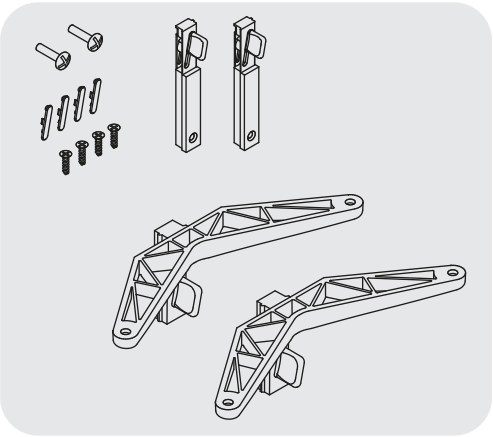

1

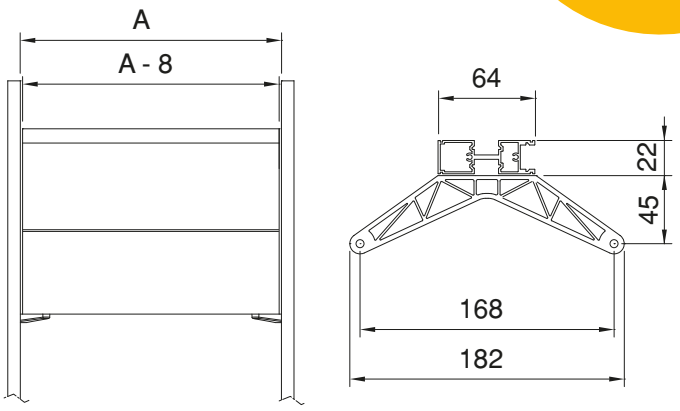

2

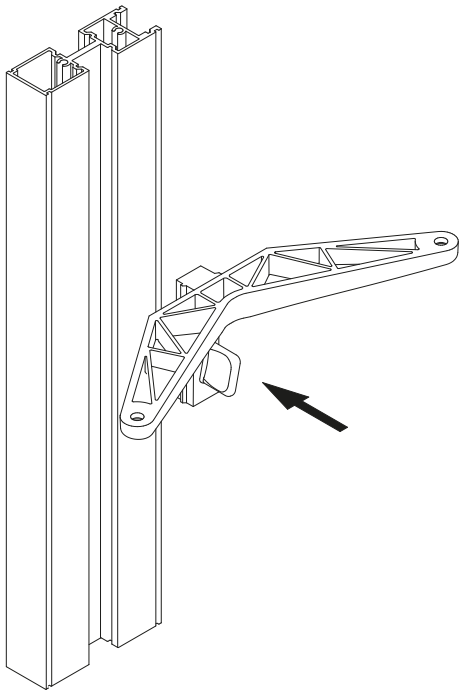

3

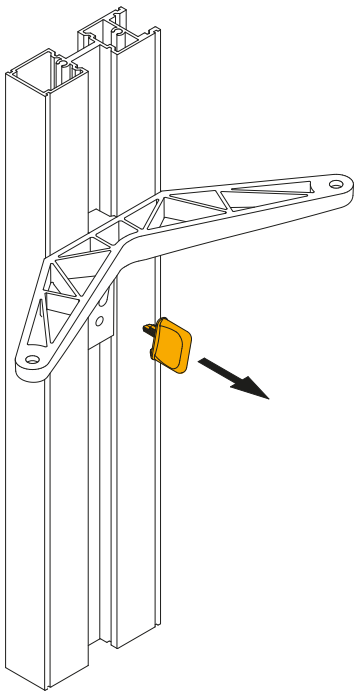

4

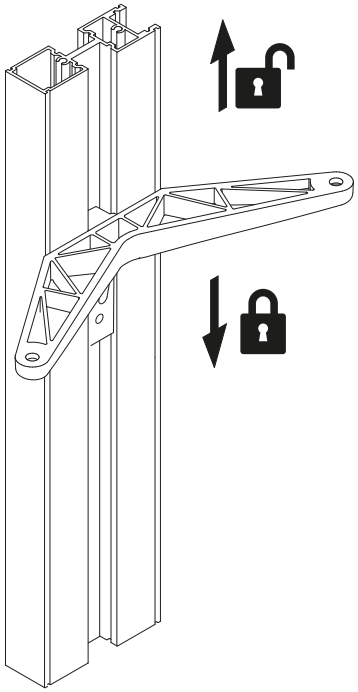

5

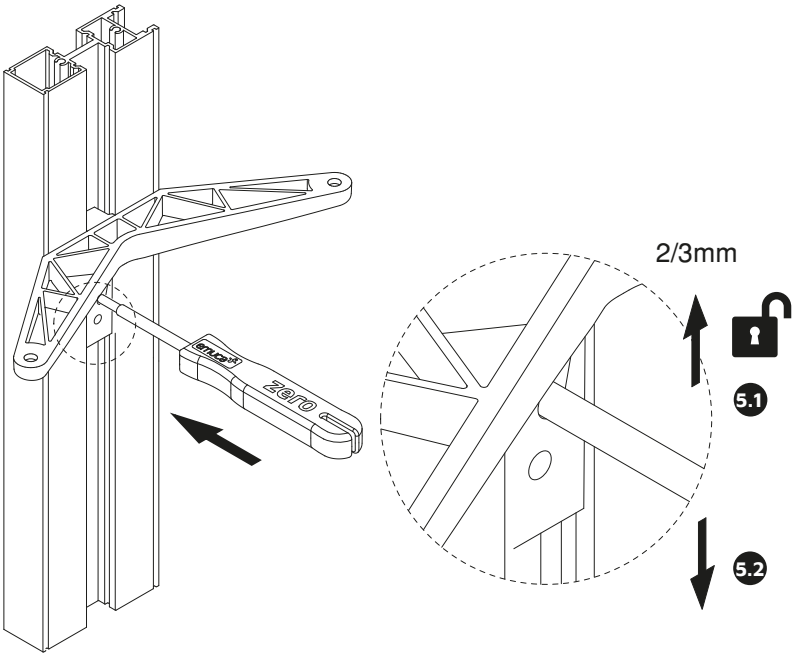

emuca
where creation begins

6

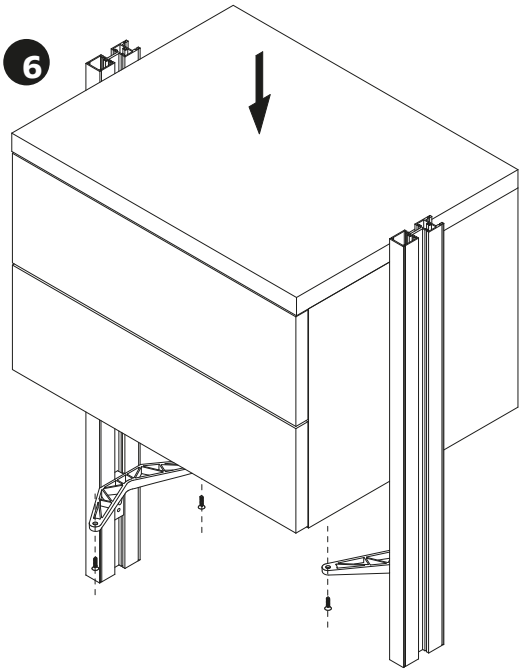

7

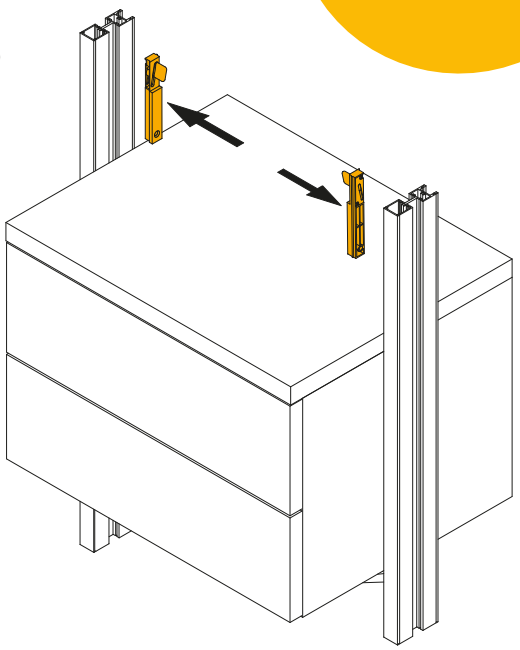

8

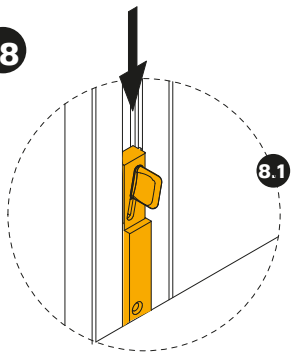

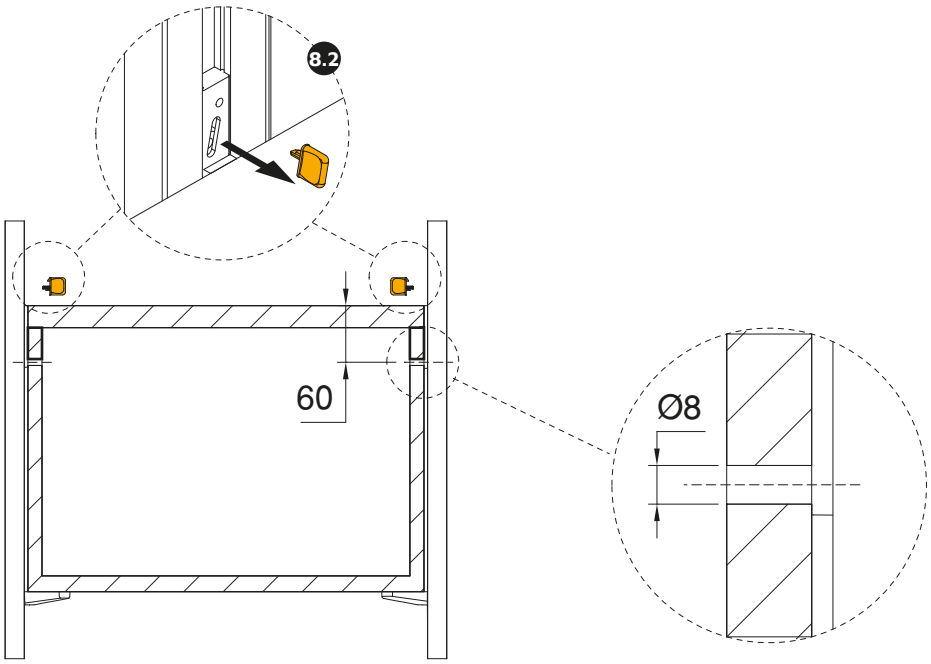

9

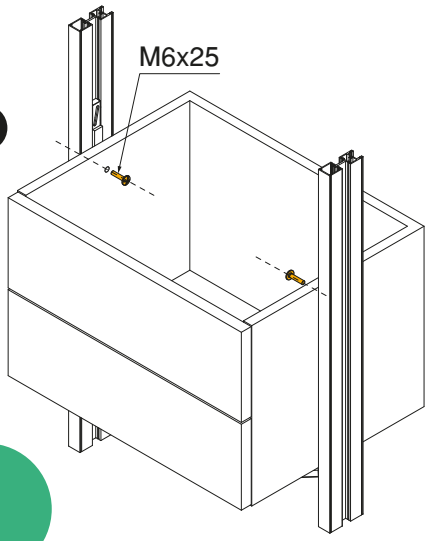
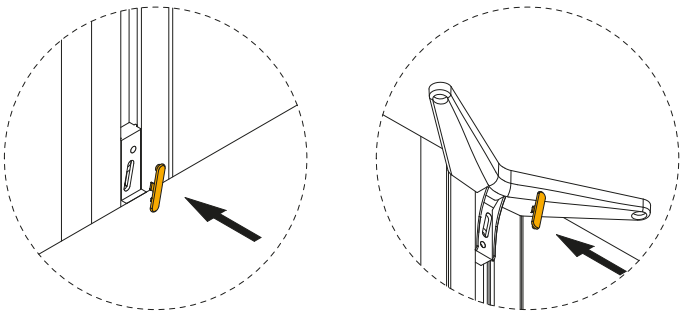
10