emuca
where creation begins

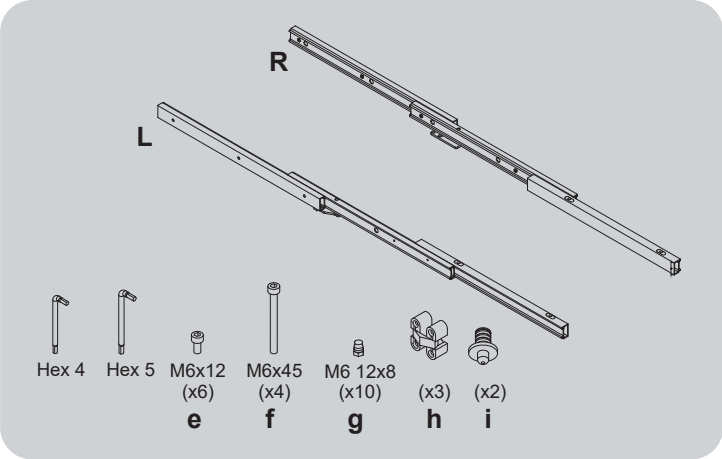

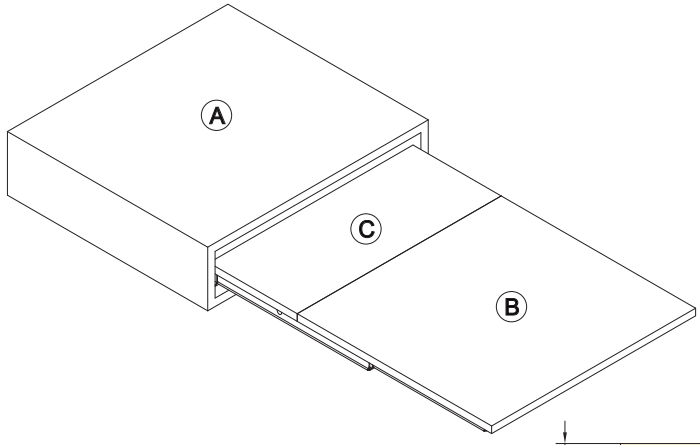

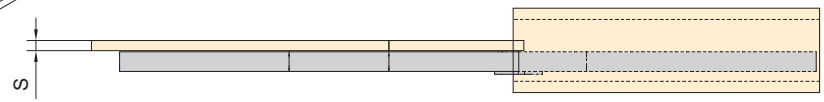

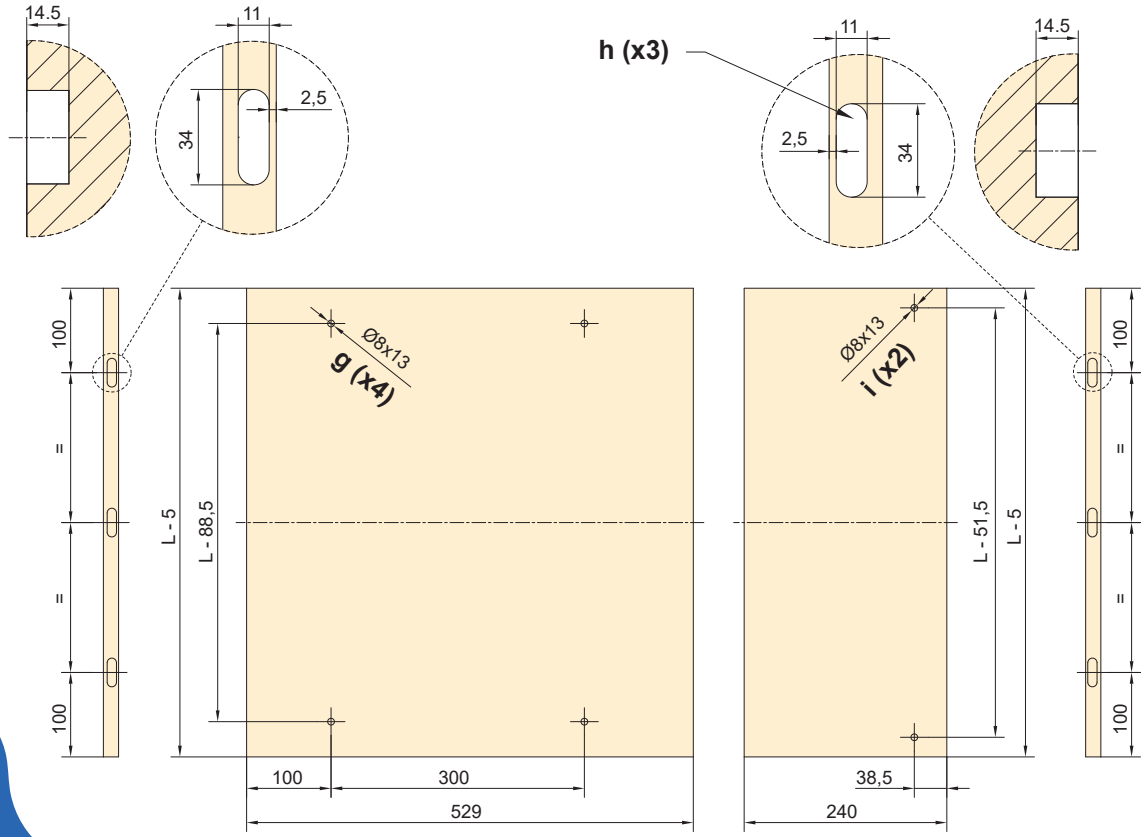

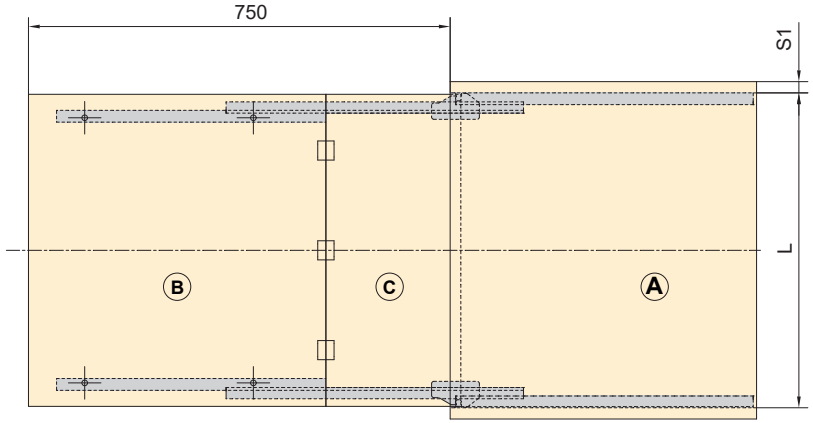

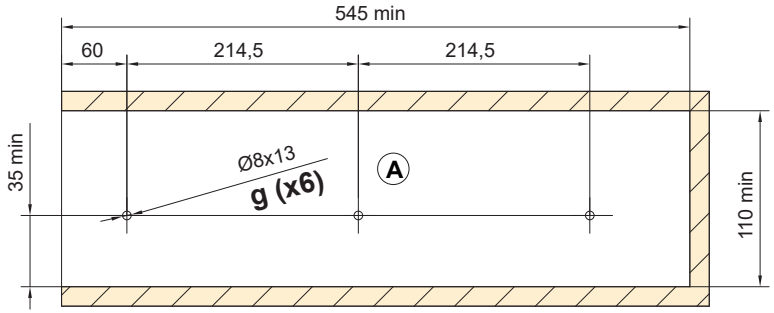

emuca
where creation begins

1

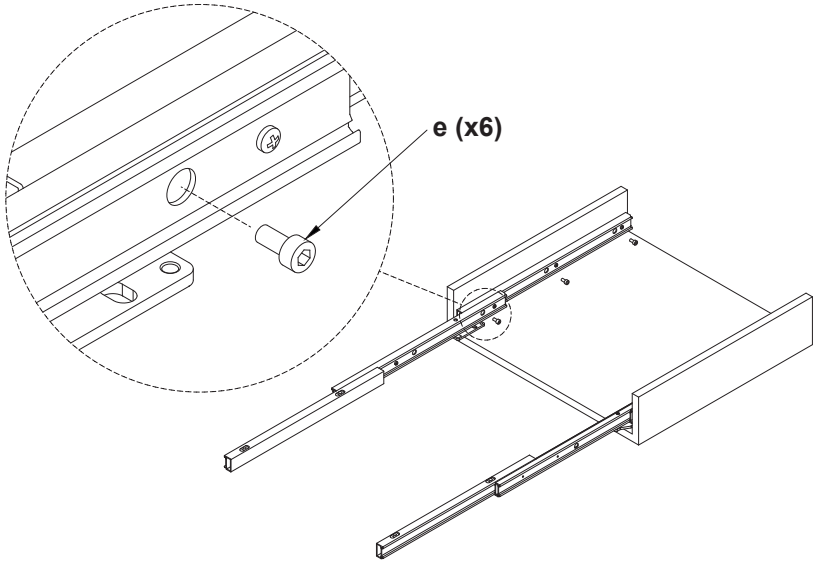

2

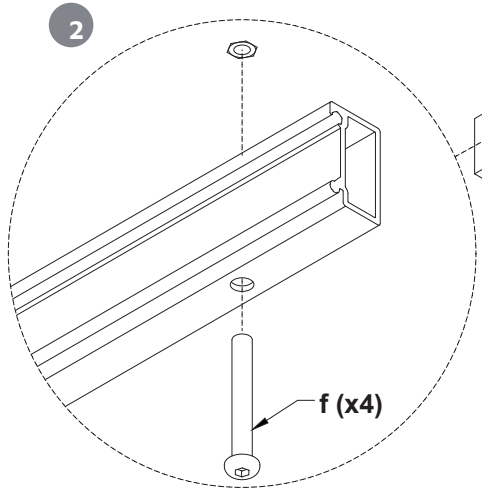

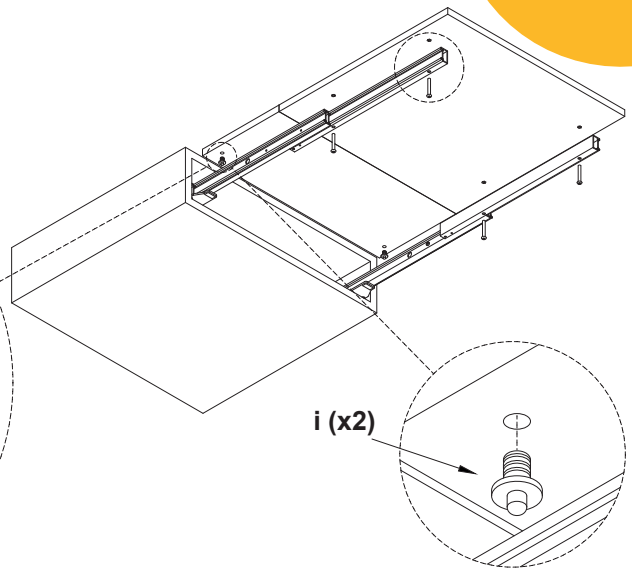

3

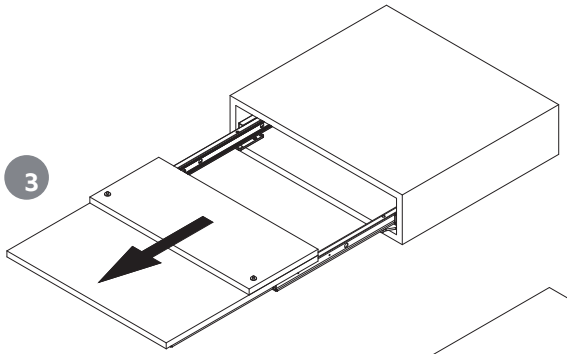

4

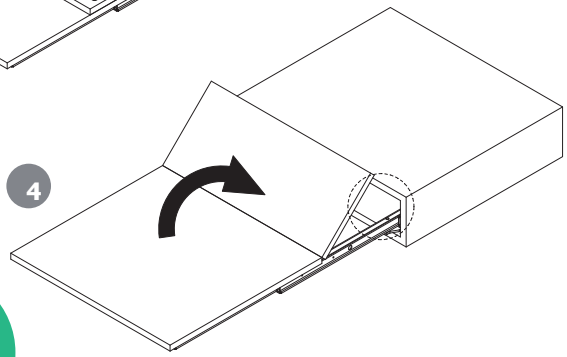

5

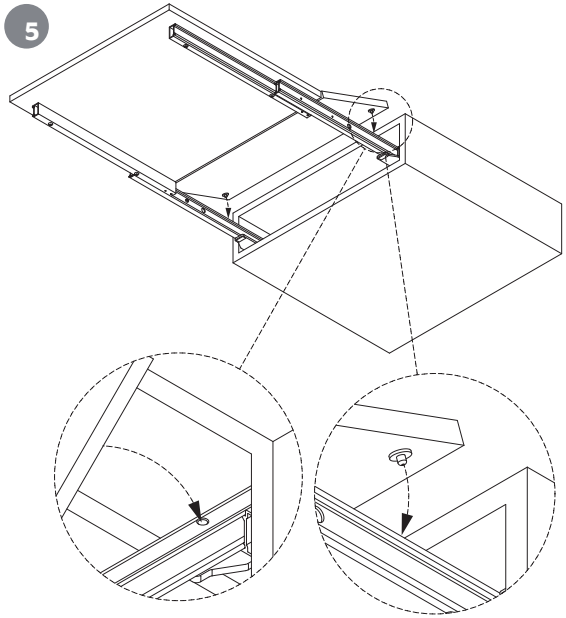
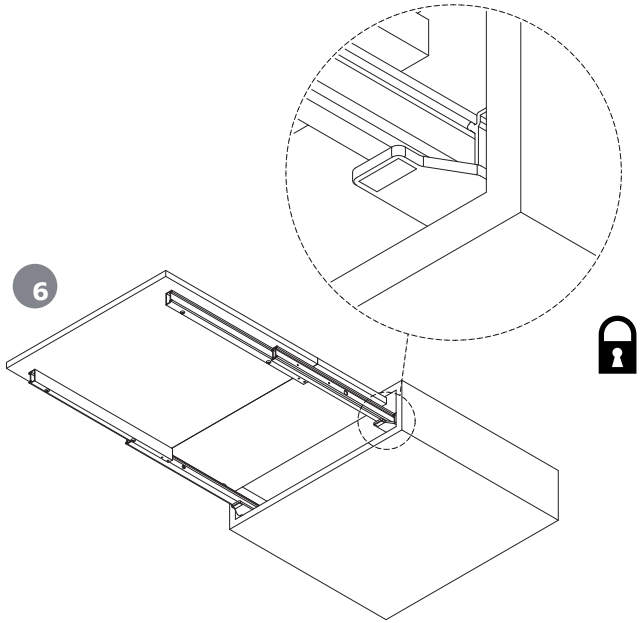
6